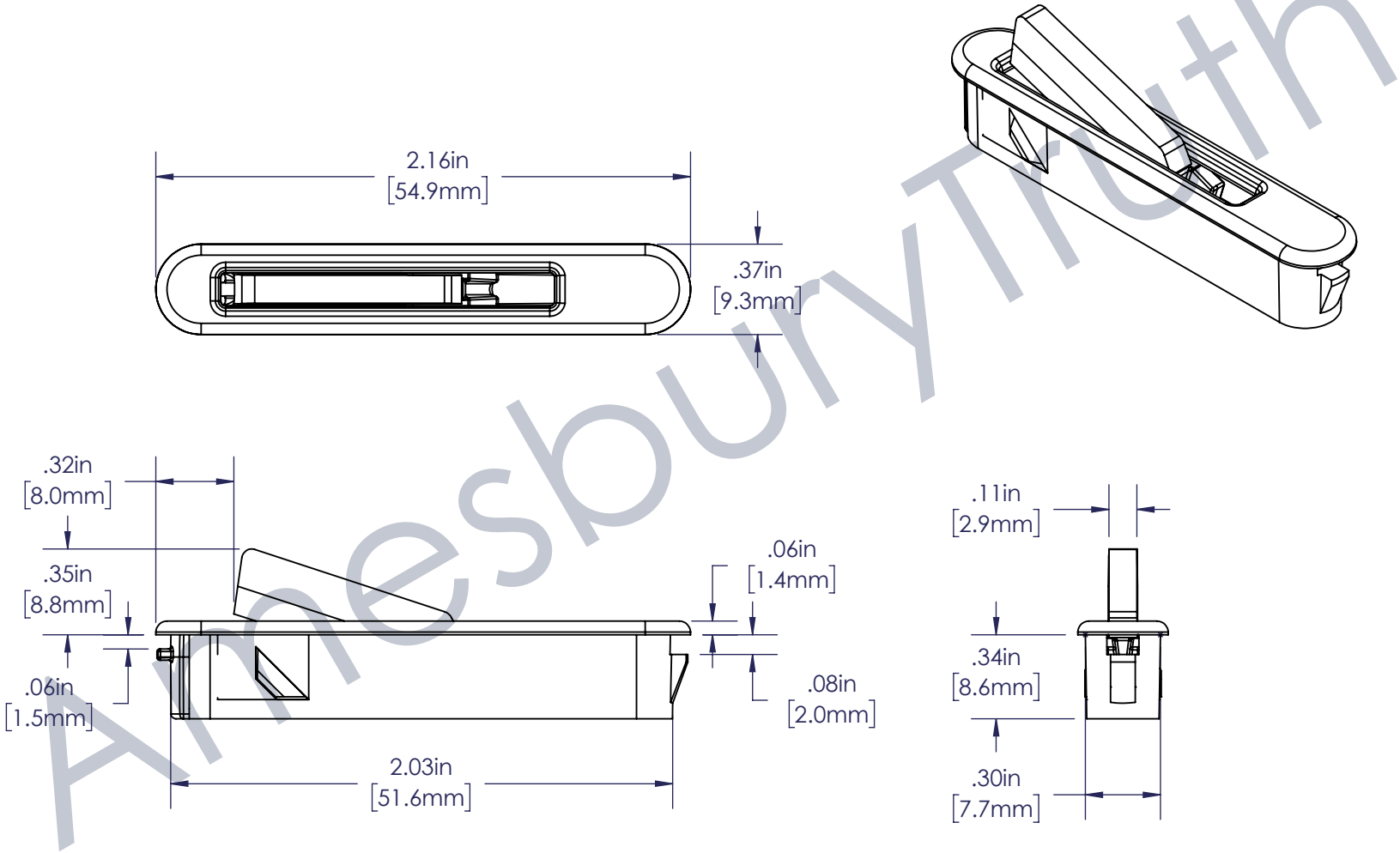

CUSTOMER PAGE

AmesburyTruth™
Engineered Solutions. Trusted Results.

INTERPRET PER: ASME Y14.5M-2009

UNITS: INCH

THIRD ANGLE PROJECTION

DRAWING TITLE: WOCD

SCALE: 3:2

SHEET 1 OF 1

DRAWING #: 13070